SPECIFICATION

宏 致 電 子 股 份 有 限 公 司

桃園縣中壢市東園路13號

No.13, Dongyuan Rd., Jhongli City,

Taoyuan County 320, Taiwan (R.O.C.)

TEL: +886-3-463-2808
FAX: +886-3-463-1800

SPEC. NO.: PS-51275-Txxx-xxx **REVISION:** O

PRODUCT NAME: 250 Series Crimping Terminal

PRODUCT NO: 51275

PREPARED:	CHECKED:	APPROVED:
LLJ	**ANDREW**	**TIM**
DATE: **2015/04/28**	DATE: **2015/04/28**	DATE: **2015/04/28**

1 REVISION HISTORY 3
2 SCOPE 4
3 APPLICABLE DOCUMENTS 4
4 REQUIREMENTS 4
5 PERFORMANCE 5
6 PRODUCT QUALIFICATION AND TEST SEQUENCE 8
7 MATING / UNMATING FORCE 9
8 ANATOMY OF CRIMPING TERMINAL 9
9 APPLICABLE WIRES: UL10987 ETFE WIRE 9
10 CRIMPING CONDITION 10
11 CRIMP HEIGHT MEASUREMENT 11
12 PULL FORCE OF CRIMPING SECTION MEASUREMENT 12
13 STANDARD INSULATION CRIMPING 12
14 CONDUCTORS CRIMPING CONDITION 13
15 CRIMPING REQUIREMENT 14

1 Revision History

Rev.	ECN #	Revision Description	Prepared	Date
1	ECN-1503124	NEW	LLJ	2015/01/15
O	ECN-1504398	SPEC “1” → “O”	LLJ	2015/04/28

2 SCOPE

This specification covers performance, tests and quality requirements for 250 Series Crimping Terminal . (Lead free product)
ACES P/N ： 51275-Txxx Crimping Terminal

3 APPLICABLE DOCUMENTS

EIA-364 ELECTRONICS INDUSTRIES ASSOCIATION

4 REQUIREMENTS

4.1 Design and Construction

4.1.1 Product shall be of design, construction and physical dimensions specified on applicable product drawing.
4.1.2 All materials conform to R.o.H.S. and the standard depends on TQ-WI-140101.

4.2 Materials and Finish

4.2.1 Crimping Terminal: High performance copper alloy (BRASS)
Finish: (a) Area: Pure Tin Plating over all.
(b) Under plate: Nickel-plated all over

4.3 Ratings

4.3.1 Voltage Rating: 250 Volts (AC(rms) /DC)
4.3.2 Current Rating:
AWG#12：20.0A (AC(rms) /DC)

4.3.3 Operating Temperature : -40℃ to +105℃

5 Performance

5.1. Test Requirements and Procedures Summary

Item	Requirement	Standard
Examination of Product	Product shall meet requirements of applicable product drawing and specification.	Visual, dimensional and functional per applicable quality inspection plan.
ELECTRICAL		
Item	**Requirement**	**Standard**
Low Level Contact Resistance	55 m Ω Max.(initial)per contact △R 20 m Ω Max.	Mate connectors, measure by dry circuit, 20mV Max., 100mA Max. (EIA-364-23)
Insulation Resistance	500 M Ω Min.	Unmated connectors, apply 500 V DC between adjacent terminals. (EIA-364-21)
Dielectric Withstanding Voltage	No discharge, flashover or breakdown. Current leakage: 1 mA max.	300V AC Min. at sea level for 1 minute. Test between adjacent contacts of unmated connectors. (EIA-364-20)
Temperature rise	30℃ Max. Change allowed	Mate connector: measure the temperature rise at rated current until temperature stable. The ambient condition is still air at 25℃ (EIA-364-70,METHOD1,CONDITION1)

MECHANICAL		
Item	**Requirement**	**Standard**
Durability	10 cycles.	The sample should be mounted in the tester and fully mated and unmated the number of cycles specified at the rate of 25.4 ± 3mm/min.
Mating / Unmating Forces	Please see item7	Operation Speed： 25.4 ± 3 mm/minute.. Measure the force required to mate/Unmate connector. (EIA-364-13)
Crimping Pull Out Force	AWG# 12: 5Kgf Min.	Operation Speed： 25.4 ± 3 mm/minute. Fix the crimped terminal, apply axial pull out force on the wire.

Vibration	1 μs Max.	The electrical load condition shall be 100 mA maximum for all contacts. Subject to a simple harmonic motion having amplitude of 0.76mm (1.52mm maximum total excursion) in frequency between the limits of 10 and 55 Hz. The entire frequency range, from 10 to 55 Hz and return to 10 Hz, shall be traversed in approximately 1 minute. This motion shall be applied for 2 hours in each of three mutually perpendicular directions. (EIA-364-28 Condition I)
Shock (Mechanical)	1 μs Max.	Subject mated connectors to 50 G's (peak value) half-sine shock pulses of 11 milliseconds duration. Three shocks in each direction shall be applied along the three mutually perpendicular axes of the test specimen (18 shocks). The electrical load condition shall be 100mA maximum for all contacts. (EIA-364-27, test condition A)

ENVIRONMENTAL

Item	Requirement	Standard
Thermal Shock	See Product Qualification and Test Sequence Group 4	Mate module and subject to follow condition for 5 cycles. 1 cycles: -55 +0/-3 ℃, 30 minutes +85 +3/-0 ℃, 30 minutes (EIA-364-32, test condition I)
Humidity	See Product Qualification and Test Sequence Group 4	Mated Connector 40℃, 90~95% RH, 96 hours. (EIA-364-31,Condition A, Method II)
Temperature life	See Product Qualification and Test Sequence Group 5	Subject mated connectors to temperature life at 85℃ fo96 hours. (EIA-364-17, Test condition A)
Salt Spray (Only For Gold Plating)	See Product Qualification and Test Sequence Group 6	Subject mated/unmated connectors to 5% salt-solution concentration, 35℃ (I) Gold flash for 8 hours (EIA-364-26)

Note. Flowing Mixed Gas shell be conduct by customer request.

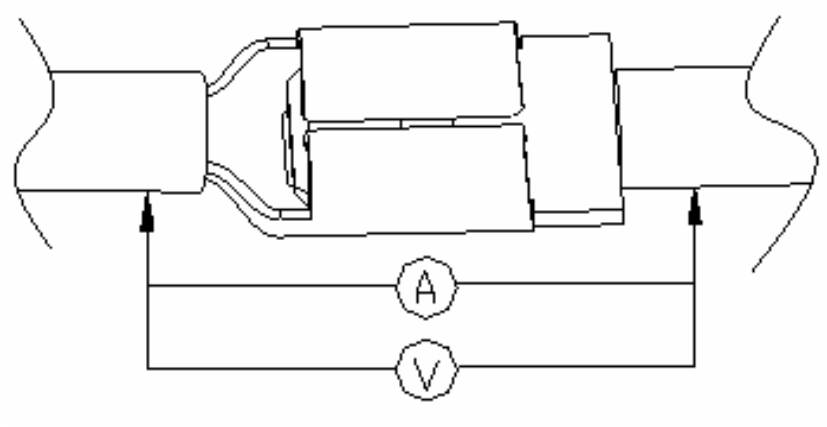

Contact Resistance Measuring Point

6 PRODUCT QUALIFICATION AND TEST SEQUENCE

Test or Examination	Test Group								
	1	2	3	4	5	6	7	8	9
	Test Sequence								
Examination of Product				1、7	1、6	1、4		1	1
Low Level Contact Resistance		1、5	1、4	2、10	2、9	2、5		2	
Insulation Resistance				3、9	3、8				
Dielectric Withstanding Voltage				4、8	4、7				
Temperature Rise	1								
Mating / Unmating Force		2、4							
Durability		3							
Vibration			2						
Shock (Mechanical)			3						
Thermal Shock				5					
Humidity				6					
Temperature Life					5				
Salt Spray (Only For Gold Plating)						3			
Crimping Pull Out Force							1		
Sample Size	2	4	4	4	4	4	4	4	4

7 Mating / Unmating Force

Initial		After 10th Cycle
Insertion Force (Max.)	Withdrawal Force (Min.)	Withdrawal Force (Min)
3.0Kgf	1.6Kgf	1.4Kgf

8 ANATOMY OF CRIMPING TERMINAL：

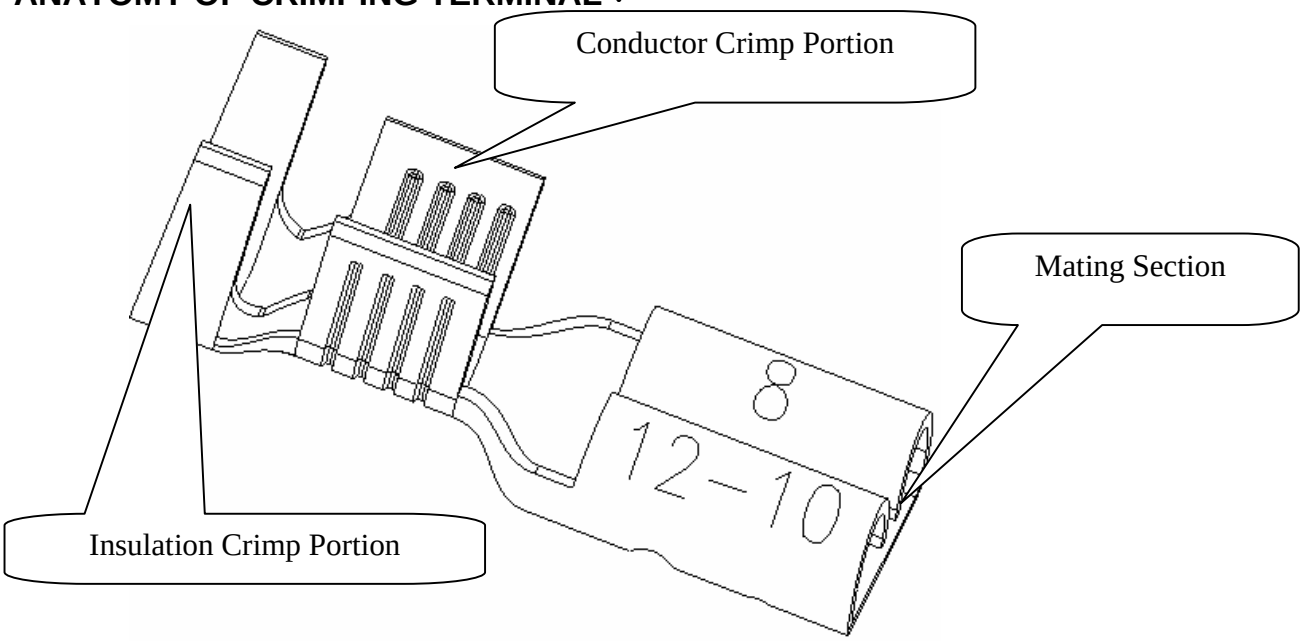

9 Applicable Wires： UL10987 etfe wire

AWG Size： AWG＃12

Insulation OD：Φ4.0mm

10 Crimping Condition：

鉚線條件表 CRIMPING CONDITION							
Part Number	Wire Specification			Crimp Height (mm)		Crimp Width (mm)	
	UL Style (REF.)	AWG Size	Insulation OD(mm)	Conductor A	Insulation B	Conductor W1	Insulation W2
51275-Txxx-xxx	UL10987	12	0.40	2.35~2.70	4.1~4.5	3.6 Max.	5.1Max.

Note:

1、 W1(Conductor Crimping Width)：W1

2、 W2(Insulator Crimping Width)：W2

3、 A (conductor Crimping height)：A

4、 B (Insulator Crimping height)：B

5、Strip Length：4.4~5.0mm(Ref.)

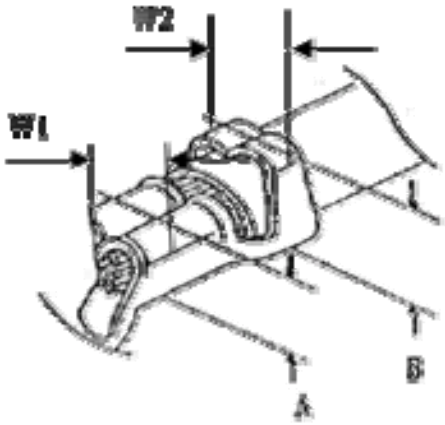

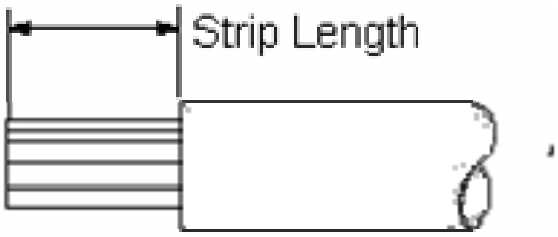

11 Crimping Height Measurement：

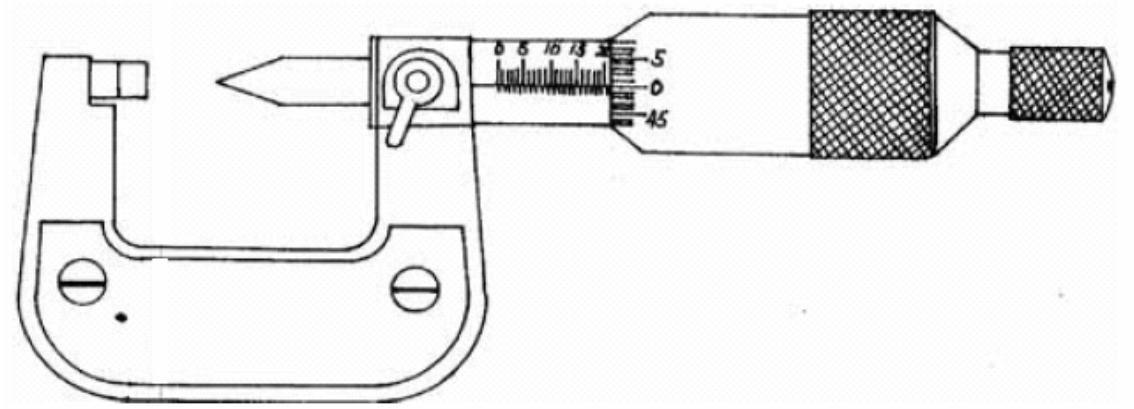

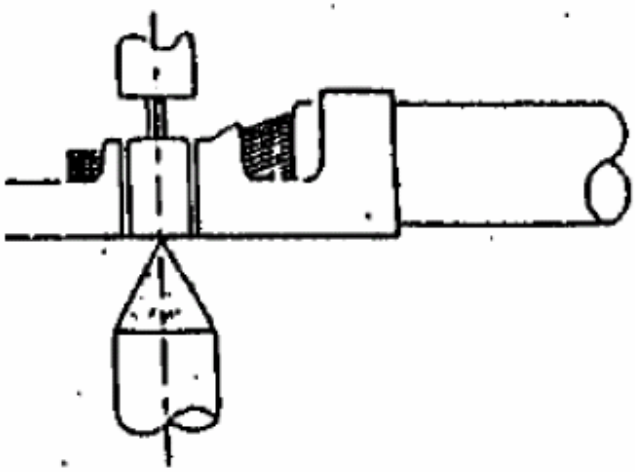

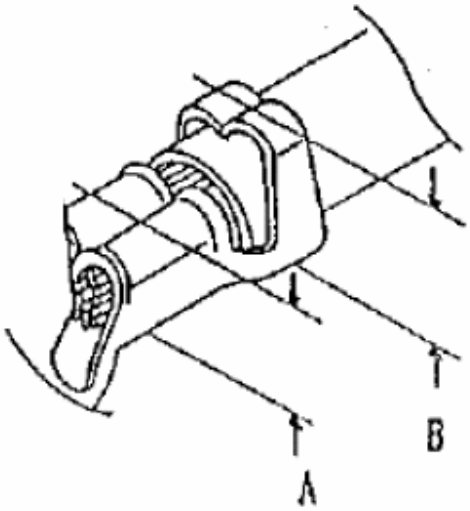

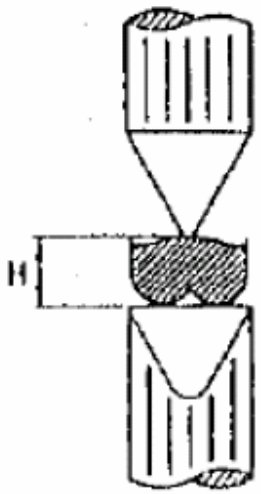

12 Pull Force of Crimping Section Measurement：

Before test samples, please measure crimp height and do not crimp insulation.

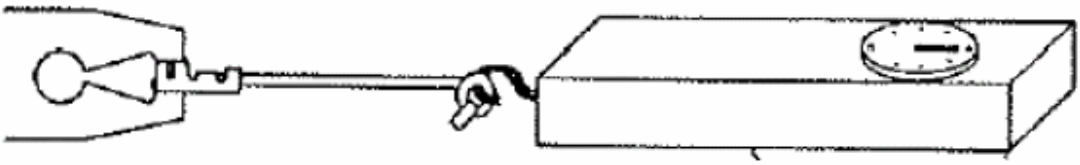

Pull Force of Crimp Section Measurement

13 Standard Insulation Crimping：

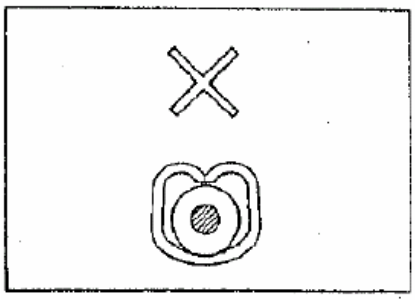

Not enough crimp

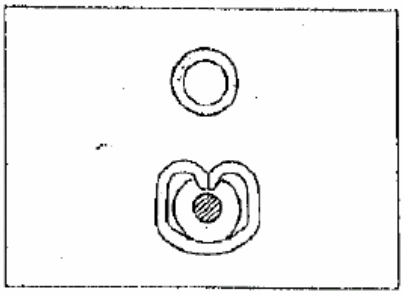

Good

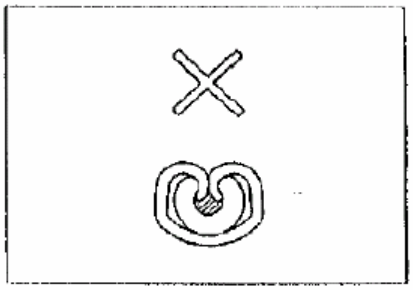

Crimp too much

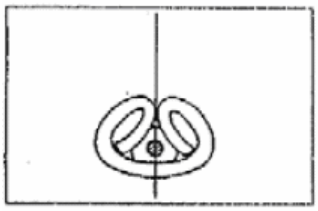

Good

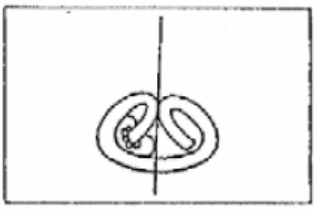

NG

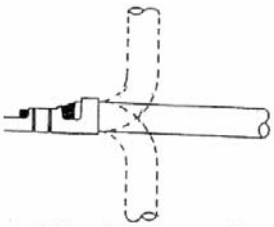

As following figure shown. It is no problem if wire bent up down 90 degrees 1 cycle and insulation position still in ideal position.

Insulation Crimp Condition

14 Conductors Crimping Condition：

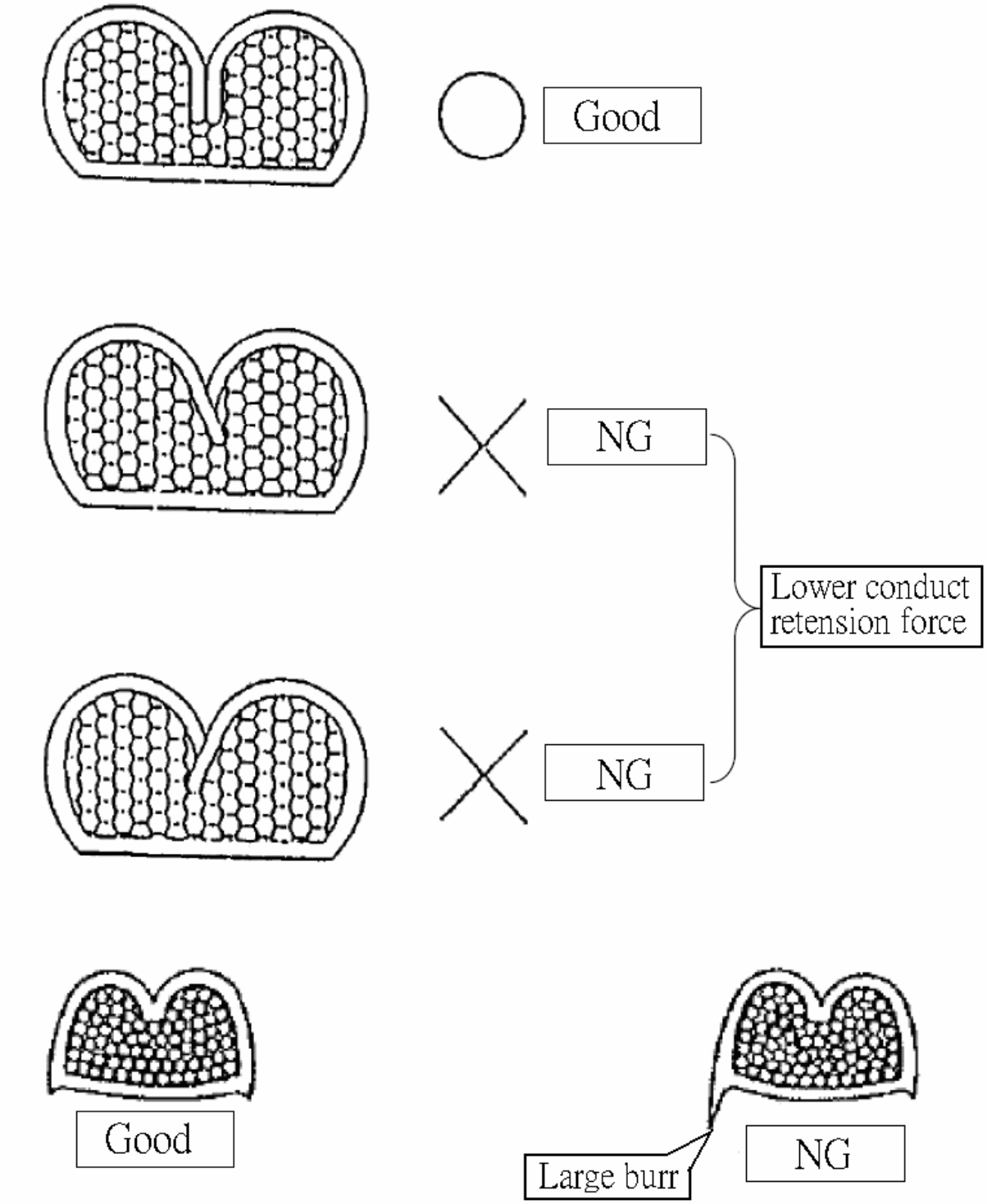

15 Crimping Requirement：

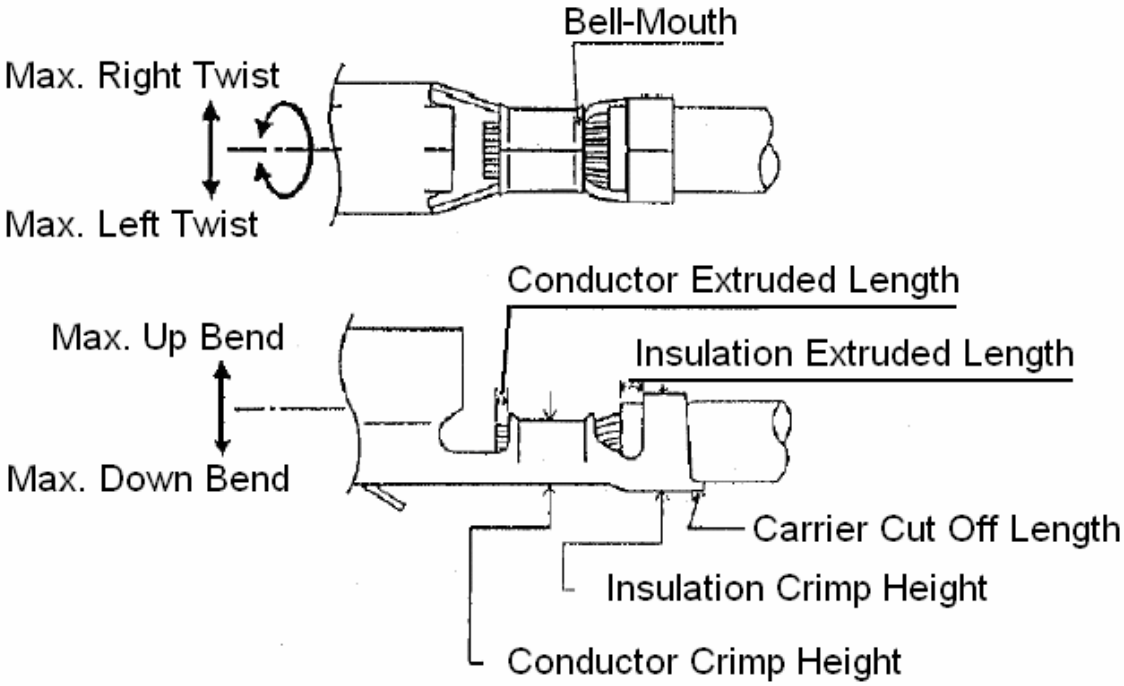

Item	Range (Ref.)
Max. Up Bend	6°
Max. Down Bend	6°
Max. Left Twist	5°
Max. Right Twist	5°
Bell-Mouth Length	0.1~0.3 mm
Carrier Cut Off Length	0~0.2mm
Conductor Extruded Length	0.05~0.3 mm